





TO 60 S6

93 W P 0 3 11 2840
- 93 — PTO CODE
- W — WERA CODE
- P — CONTROL TYPES
- 0 — MOUNTING
- 3 — CONNECTION
- 11 — GEAR
- 2840 — NAME

CONNECTION



UNI

CONTROL

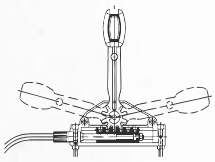

MECHANIC



VACUUM

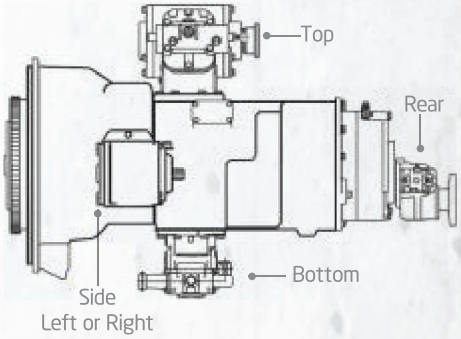

TO 60 S6 @ 60 S5 @ 21 CH 11015

Gear Box

	Code	Ratio	Torque Nm / Kgm	Speed rpm	Power Kw	Rotation	Control	Mounting	Connection	Weight Kg
1	491V4322T060S6	1:0,88	225,5/23	760	24	Left (ccw)	Vacuum	Side - L	Uni	15
2	492V4322T060S6	1:1,06	196,1/20	1018	21	Left (ccw)	Vacuum	Side - L	Uni	6,5
3	492M4322T060S6	1:1,06	196,1/20	1018	21	Left (ccw)	Mechanic	Side - L	Uni	6,5

Vehicles; HYUNDAI HD 75 EURO4 / F 150 /F160